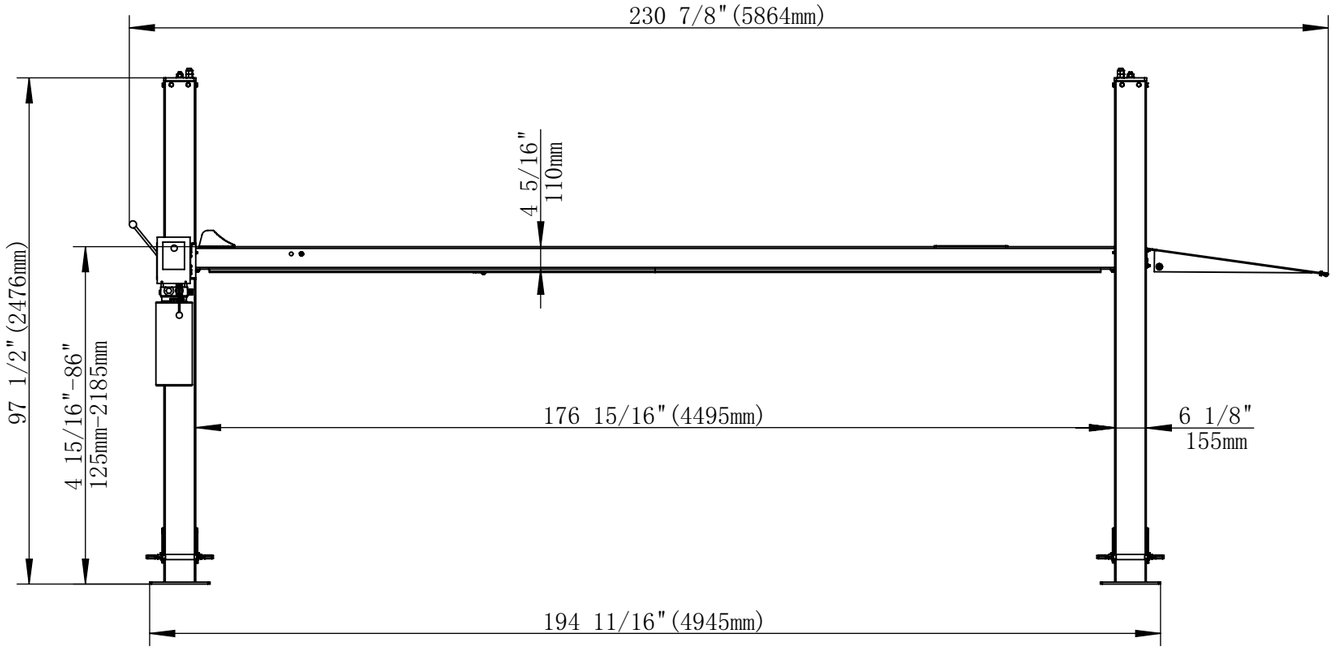
230 7/8"(5864mm)
4 5/16"
110mm
97 1/2"(2476mm)
4 15/16"-86"
125mm-2185mm
176 15/16"(4495mm)
6 1/8"
155mm
194 11/16"(4945mm)

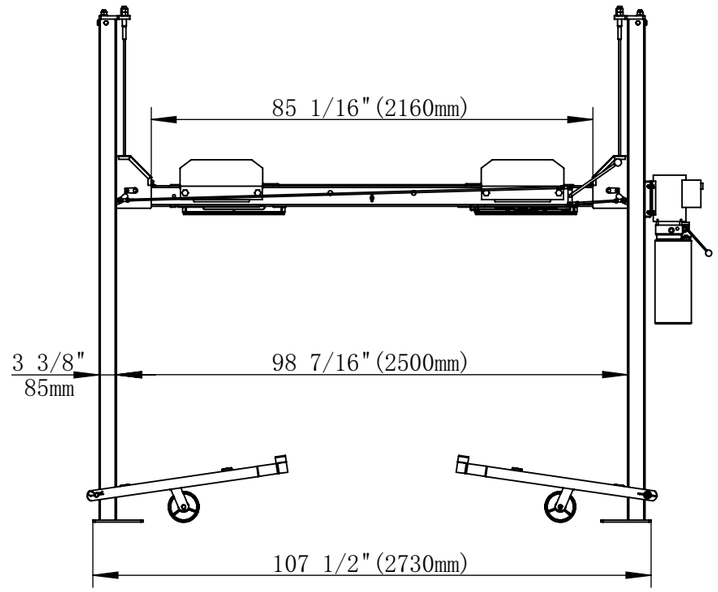
85 1/16"(2160mm)
3 3/8"
85mm
98 7/16"(2500mm)
107 1/2"(2730mm)

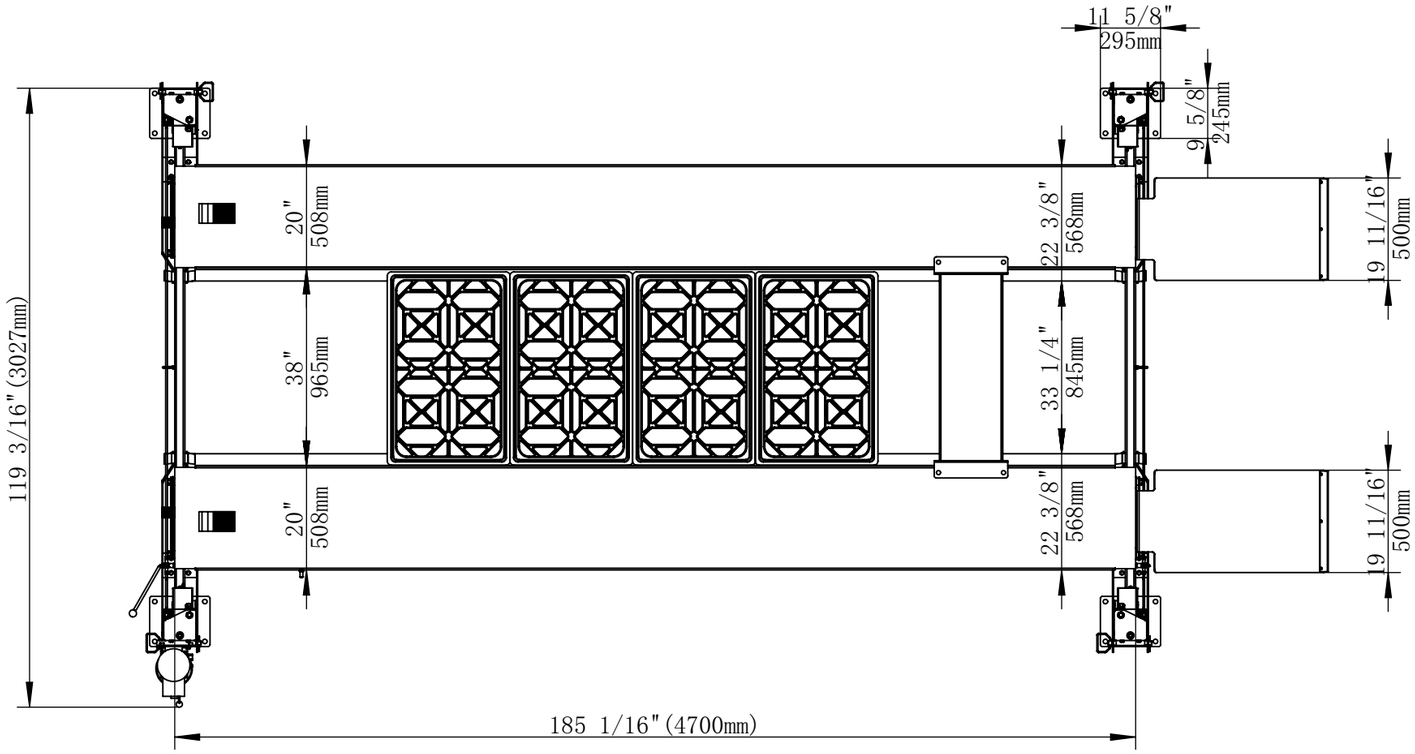
11 5/8"
295mm
9 5/8"
245mm
20"
508mm
38"
965mm
20"
508mm
22 3/8"
568mm
33 1/4"
845mm
22 3/8"
568mm
19 11/16"
500mm
19 11/16"
500mm
119 3/16"(3027mm)
185 1/16"(4700mm)

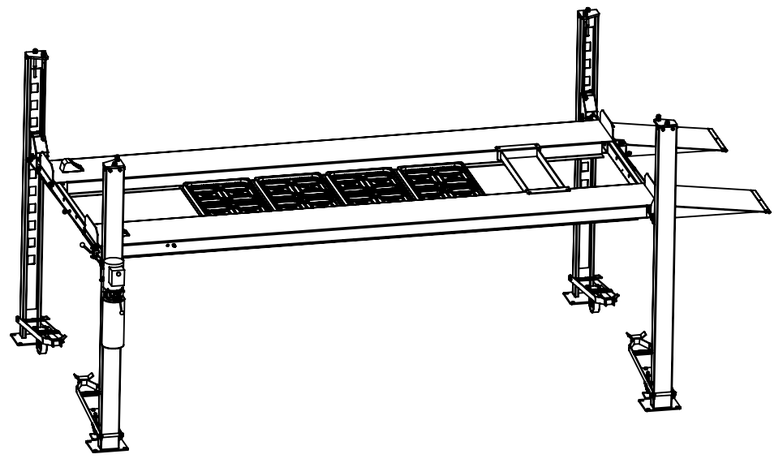

PP-8HL